TEMPOMATIC multi-urinals urinal valve

Ref. 487620

Mains supply, electronic with barrier

2025 UK public price excluding VAT: £894.94

DESCRIPTION

TEMPOMATIC multi-urinals urinal valve - Ref. 487620

Recessed electronic valve with infrared barrier for urinals:
Rinsing for 1 - 8 urinals (standard or stall) or 2 siphon action urinals.
For recessed installation.
Electronic unit with 230/12V transformer.
Hydraulic unit with solenoid valve, stopcock M¾" and filter.
Hygienic duty flush every 24 hours after last use, prevents vacuums in the siphon.
Presence detection by infrared barrier.
Recessed Infrared detector Ø 50mm and reflector Ø 85mm.
Automatic pre-rinse possible after the arrival of the first user.
Automatic rinse every 30 or 60 sec.
Time flow pre-set at 3 sec., can be adjusted from 2 to 14 sec.
Flow rate 0.3 l/sec. at 3 bar pressure, can be adjusted.
Maximum detection range recommended: 6 meters.
Anti-blocking security: automatic shut-off after 20 uninterrupted cycles.
Suitable for people with reduced mobility.
30-year warranty.

ADVANTAGES

- Total hygiene: no manual contact
- ECO time flow set at 3 seconds
- Wall recessed installation
- Hygienic duty flush

TECHNICAL CHARACTERISTICS

TEMPOMATIC multi-urinals urinal valve - Ref. 487620
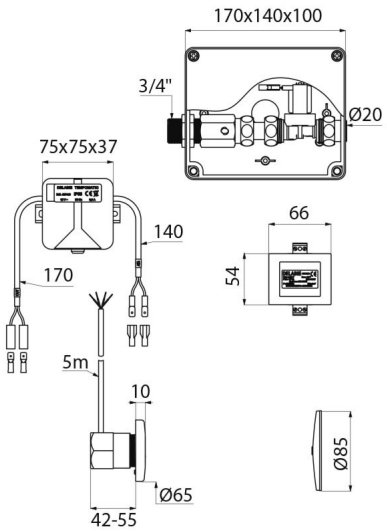
Supply	230/12V mains supply
Connector	3/4"
Technology	Electronic
Flow rate	0,3 l/sec.
Norms	CE
Warranty	30 YEAR WARRANTY
Repairability	50 YEARS REPAIRABILITY