BIOSAFE mechanical basin mixer

Ref. 2920T

Single hole mechanical mixer H. 100mm L. 110mm

2025 UK public price excluding VAT: £251.56

DESCRIPTION

BIOSAFE mechanical basin mixer - Ref. 2920T

Deck-mounted mechanical basin mixer.
Single hole mixer with a spout H. 100mm L. 110mm and BIOSAFE hygienic outlet.
Spout suitable for fitting a BIOFIL point-of-use filter.
Ø 35mm ceramic cartridge with pre-set maximum temperature limiter.
Spout with a tube with a smooth interior, no niches where bacteria can develop, and low water volume.
The speed with which the water flows through the tube considerably reduces biofilm development.
Thermal shocks are possible without removing the lever or shutting off the cold water supply.
Body with very low water volume (reduces bacterial development).
Flow rate regulated at 5 lpm.
Solid control lever.
Ergonomic, brass pop-up waste 1 1/4".
F3/8" rotating PEX flexibles.
Fixing reinforced via 2 stainless steel rods.
Mechanical mixer ideal for healthcare facilities, retirement and care homes, hospitals and clinics.
Single hole mixer suitable for people with reduced mobility.
Mixer with 30-year warranty.

ADVANTAGES

- Hygiene: body with very low water volume
- Thermal shock without removing the control lever
- Pre-set maximum temperature limiter
- Solid lever is easy to grip

TECHNICAL CHARACTERISTICS

BIOSAFE mechanical basin mixer - Ref. 2920T
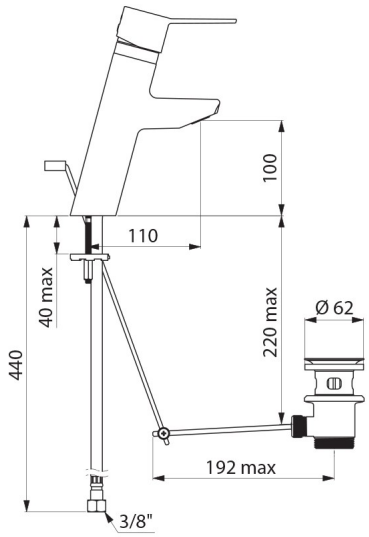
Connector	F3/8"
Technology	BIOSAFE mechanical mixer
Drop height	100mm
Spout length	110mm
Flow rate	5 lpm
Temperature limiter	Yes
Finish	Chrome-plated brass
Norms	ACS WRAS
Warranty	30 YEAR WARRANTY